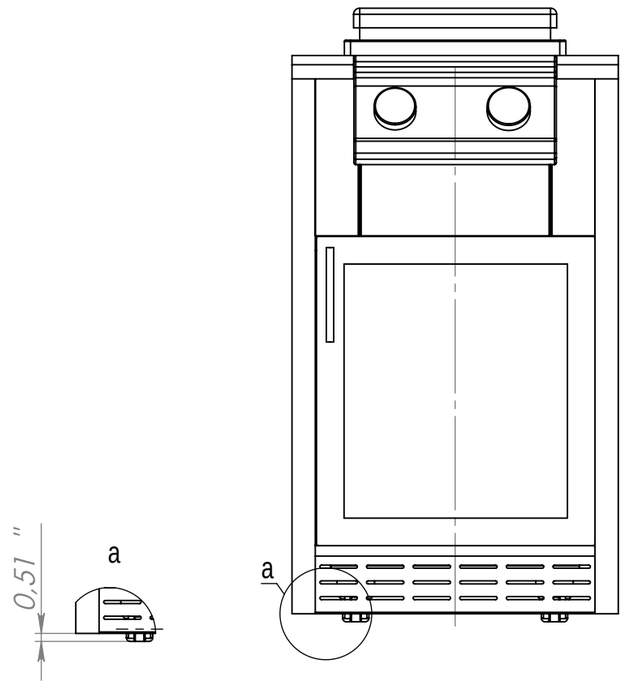

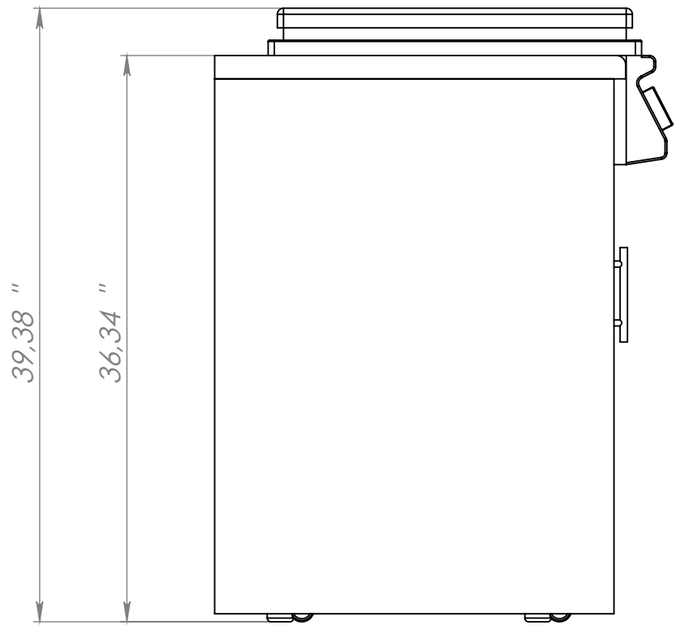

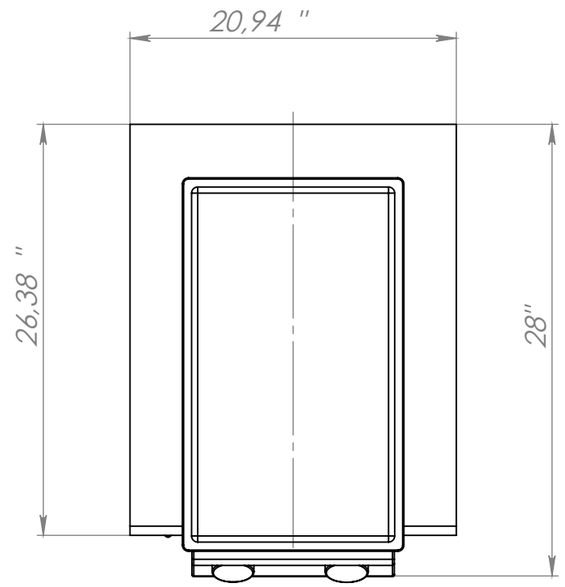

UNLESS OTHERWISE SPECIFIED: DIMENSIONS ARE IN INCHES SURFACE FINISH: TOLERANCES: LINEAR: ANGULAR:	FINISH: Brushed hair line				DEBUR AND BREAK SHARP EDGES	DO NOT SCALE DRAWING / REVISION
						Hanos co
	NAME	SIGNATURE	DATE			TITLE: Turks
DRAWN						
CHK'D						
APPV'D						
MFG						
Q.A				MATERIAL:		DWG NO. Ready Kitchens / A3
				WEIGHT:		SCALE:1:10 / SHEET 1 OF 1